Rev No.	Description	Date	Name
D	Redesign	17/03/06	A.Vismara

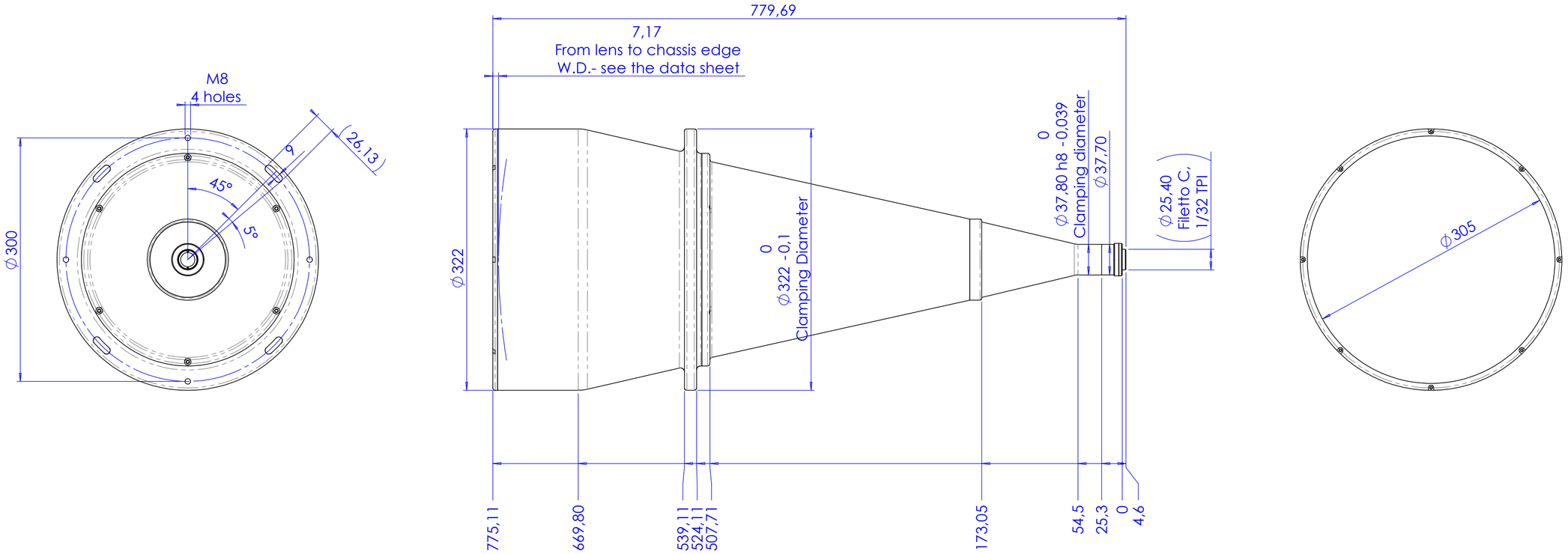

Material	N.A.	Mass	20.8 kg	Scale	1:4
Surface treatment	N.A.	Project-Prod.item/Instrument	Telecentric lens 23 240		

Geometrical tolerance (ISO 2768-2)	Class	K	Undimensioned bevels	1x45°
Linear tolerance (ISO 2768-2)	Class	m	Undimensioned radii	R 0.5

0.5 ÷3	>3÷ 6	>6÷ 30	>30÷ 120	>120 ÷400	>400÷ 1000	>1000 ÷2000	>2000 ÷4000
±0.1	±0.1	±0.2	±0.3	±0.5	±0.8	±1.2	±2

Description: Assembly

	Date	Name
Designed	17/03/06	A.Vismara
Draw	17/03/06	A.Vismara
Checked	X	C.Sedazzari

Drawing No. 13731-0-D

Sheet 1/1

www.opto-engineering.com

Reproduction forbidden without specific authorization

OPTO ENGINEERING S.r.l. - 46100 Mantova Italy - Via Cremona, 29 - Tel. +39 0376 263525 - e-mail: info@opto-engineering.com - http://www.opto-engineering.com