computar

V2528-MPY

f=25mm F2.8
for 1.1″ type 12 Megapixel cameras, Fixed-focal
C-Mount

Model No.		V2528-MPY		Effective Lens Aperture	Front	φ17.3mm	
Focal Length		25mm			Rear	φ14.2mm	
Max. Aperture Ratio		1:2.8		Distortion	1.1 type	0.3%	
Max. Image Format		14.2mm x 10.4mm(φ17.6mm)			1 type	0.2%	
Operation Range	Iris	F2.8 - F16.0			2/3 type	0.1%	
	Focus	0.3m - Inf.		Back Focal Length		11.3mm	
Control	Iris	Manual		Flange Back Length		17.526mm	
	Focus	Manual		Mount		C-Mount	
Object Dimension at M.O.D.	1.1 Type	16cm x 12cm		Filter Size		M34.0 P=0.5mm	
	1 Type	14cm x 11cm		Dimensions		φ39.5mm x 34mm	
	2/3 Type	10cm x 7cm		Weight		78.6g	
Angle of View	D	1.1 Type	38.7°	1 Type	35.4°	2/3 Type	24.8°
	H		31.7°		28.7°		20.0°
	V		23.5°		21.7°		15.0°
Operating Temperature		-10℃ - +50℃					

M.O.D. : Minimum Object Distance
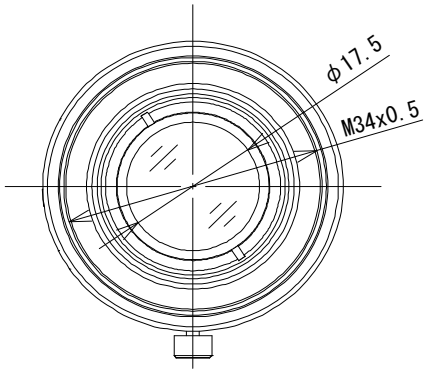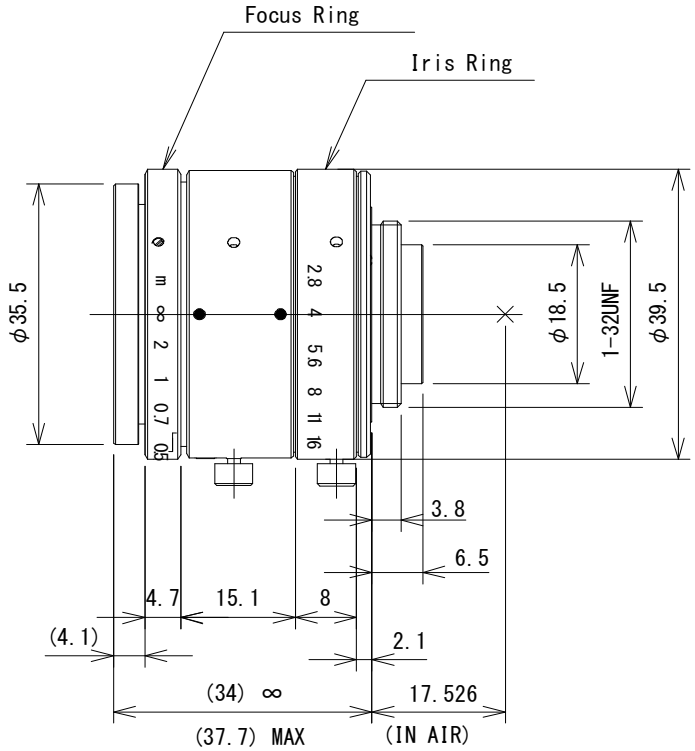
Dimensions